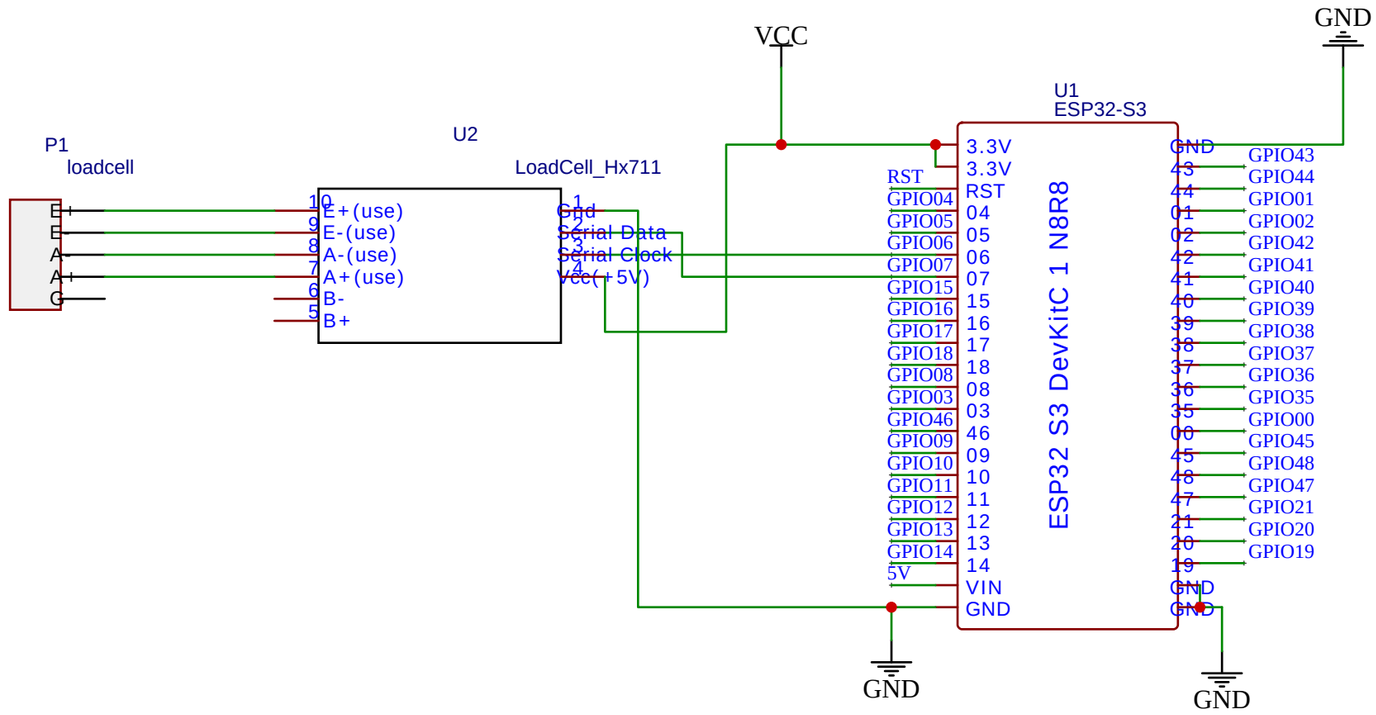

TITLE: BOARD2 LOADCELL&Hx711		REV: 1.0
EasyEDA	Company: ANDREW'S FLEX	Sheet: 2/2
	Date: 2026-3-12 Drawn By: ANDREW	